Pro line

Gavita **Pro** 750e / 1000e DE EU

1. Introduction

Thank you for purchasing the Gavita Pro 750e DE EU or the Gavita Pro 1000e DE EU. Please read and understand this manual completely before using the product. Only use the product as specified in this manual.

1.1. Used symbols

⚠ **Warning!** A warning indicates severe damage to the user and/or product may occur when a procedure is not carried out as described.

⚠ **Caution!** A caution sign indicates problems may occur if a procedure is not carried out as described. It may also serve as a reminder to the user.

Note: A note gives additional information, e.g. for a procedure.

This symbol indicates that the reflector and lamp can reach very high temperatures (>85 °Celsius). Mind a cool down period before performing maintenance.

CE With this symbol Gavita declares that this product complies with legal European requirements.

The symbol on the material, accessories or packaging indicates that this product may not be discarded as household waste. Dispose of the equipment through a recycling centre that handles electronics and electrical appliances within the EU and in other European countries which use separate collection systems for used electronics and electrical appliances. By disposing of the equipment in the proper way, you will be helping to prevent possible risks to the environment and public health, which might otherwise be caused by improper handling of the discarded equipment. Recycling of materials contributes to the conservation of natural resources. Therefore, please do not dispose of your old electronics and electrical appliances via household waste.

This symbol indicates the minimum distance (B) between the fixturetype (A) and the lid surface.

2. Product description

The Gavita Pro 750e DE EU and the Gavita Pro 1000e DE EU are adjustable horticultural fixtures. The Gavita Pro 750e DE EU can be used to drive a double ended 750 W 400 V high frequency (electronic) high pressure sodium lamp. The Gavita Pro 1000e DE EU can be used to drive a double ended 1000 W 400 V high frequency (electronic) high pressure sodium lamp.
The Gavita Pro 750e DE and the Gavita Pro 1000e DE are e-series products. They can be remotely switched and adjusted by a Gavita Master controller. The controller can automatically switch the fixture on and off during a 24 hour cycle.
The controller also offers a temperature safety feature, dimming or switching off connected fixtures when the temperature in a climate room becomes too high.
The product can also be controlled by hand or by conventional timers in combination with a contactor.
In this manual, the Gavita Pro 750e DE EU and the Gavita Pro 1000e DE EU will be referred to as: "the fixture".

3. Product information and specifications

3.1. General product information

Product name	Pro 6/750e DE FLEX			Pro 1000e 120/240 DE EU		
Manufacturer	Gavita Holland bv					
Version	EU	UK	CH	EU	UK	CH
EAN Code	8718403053265	8718403053289	8718403053296	8718403053326	8718403053340	8718403053357
Part number	18.30.74.23.10	18.30.74.24.11	18.30.74.23.12	18.30.14.23.10	18.30.14.24.11	18.30.14.23.12
Plug type	EU plug 230 V	UK plug 240 V	CH plug 230 V	EU plug 230 V	UK plug 240 V	CH plug 230 V

3.2. Technical specifications

Version	Pro 6/750e DE FLEX	Pro 1000e 120/240 DE EU
Product weight	6,35 kg	
Dimensions (L*W*H)	58,5x24x26,5 cm (height excl. mounting hooks)	
Temperature case	75 °Celsius	
Temperature ambient	0 ~ 35 °Celsius	
Input voltage +/-10%	230 - 240 V AC	230 - 240 V AC
Input current at 100%	3,5 A	4,6 A
Input current at 110/115%	3,9 A	5,3 A
Input power at 100%	795 W	1055 W
Input power at 110%	870 W	1210 W
Power factor	0,98	
Total Harmonic Distortion	< 10%	
Frequency	50 - 60 Hz	
Certification	CE	
Power inlet	IEC C14	
Insulation	Class 1 - requires an earth connection	
Power output settings (plus EXT)	400/500/600/750/825 Watt /EXT	600/750/825/1000/1150 Watt /EXT
External dim:	Gavita Master controller analog protocol (<11,5V)	
External control signal:	RJ14 connector build in (6P4C)	
Ignition voltage:	5 kV / 600 ms	
Inrush current:	≤ 37,5 Amps	≤ 37,5 Amps

3.3. Compatible products and accessories

	Product name	Gavita part number
Compatible controllers	Gavita Master Controller EL1 EU	60.55.00.23.10
	Gavita Master Controller EL2 EU	60.56.00.23.10
	Gavita Master Controller EL1 UK	60.55.00.24.11
	Gavita Master Controller EL2 UK	60.56.00.24.11
Replacement reflector	HortiStar HR96 1000 DE	30.46.02.10
Compatible lamps	Gavita Pro 750 W EL DE FLEX HPS	26.74.16.11
	Gavita Pro 1000 W EL DE HPS	26.10.16.11
Compatible power cords	Power cord Euro, 5 meter	60.30.40.01
	Power cord Swiss, 5 meter	60.30.40.03
	Power cord UK, 5 meter	60.30.40.02
Compatible interconnect cables	Interconnect cable RJ14, 0,6 meter	60.50.00.08
	Interconnect cable RJ14, 1,5 meter	60.50.00.04
	Interconnect cable RJ14, 2,4 meter	60.50.00.09
	Interconnect cable RJ14, 3 meter	60.50.00.10
Compatible splitter	3 way RJ14 cable splitter	60.50.00.01

3.4. Environment

The product is meant for use in climate rooms. The product may be used in damp environments. The product may not be used in wet environments or outdoors. The Gavita Pro 750 W and 1000 W lamps function optimal when the ambient temperature is between 20 ~ 30 °Celsius.

3.5. Legislation

CE LVD approval according to: EN 60598-1: 2008 + A11: 2009.
CE EMC approval according to: EN 55015 (2006) + A1 (2007) + A2 (2009); EN 61000-3-2 (2006) + A1 (2009) + A2 (2009); EN 61000-3-3 (2008); EN 61547 (2009).

4. Safety recommendations and warnings

Warning! Carefully read the warnings below before using or working with the product!

- Always adhere to the local rules and regulations when installing or using the fixture.
- This product may cause interference to radio equipment and should not be installed near maritime safety communications equipment or other critical navigation or communication equipment operating between 0.45 - 30 MHz.
- Do not use the fixture when either its lamp or its power cord are damaged. Replace the power cord only with original certified cords. Replace the lamp only with lamps specified by Gavita (see paragraph 3.3).
- The use of other lamps may damage the product and lamp and will void the warranty.
- Modifications to the cords can lead to unwanted electromagnetic effects, which makes the product not comply with legal requirements.
- Do not expose the fixture to:
  - condensing humidity, heavy mist, fog or direct spray;
  - (ambient) temperatures outside the specified range;
  - dust and contamination;
  - direct sunlight during use or HID light that could heat up the ballast.
- Always disconnect the fixture from mains before performing any maintenance.
- Always allow for a cool down period of at least 30 minutes before touching the lamp or reflector. Touching the lamp or the reflector when the lamp is lit or immediately afterwards will result in severe burns!
- Never touch the lamp with bare hands as this will cause damage to the lamp.
- Do not use the fixture near flammable, explosive or reactive substances. The lamp and the reflector of the fixture reach temperatures of >85 °Celsius.
- Do not use sulfur vaporizers or water misters. Sulfur and calcium deposits on your reflector will decrease its efficiency.
- The installation and use of the fixture is the responsibility of the end user. Incorrect use or installation can lead to failure and damage to the fixture. Damage to the fixture and electronic circuitry as a result of incorrect installation and use revokes the warranty.

5. Contents (1)

A. Pro 750e DE / 1000e DE fixture
   1. Electronic ballast
   2. Pro-line bracket
   3. Lever to unlatch reflector
   4. Lamp sockets
   5. Reflector Hortistar HR96 750/1000 DE
   6. Mounting points

B. Threeway control cable splitter (3xRJ14)
C. 2x Interconnect/ drop cable (RJ14/RJ14) Cable length: 1,5 m.
D. Gavita Pro 750 W / 1000 W EL 400 V lamp
E. Local power cord

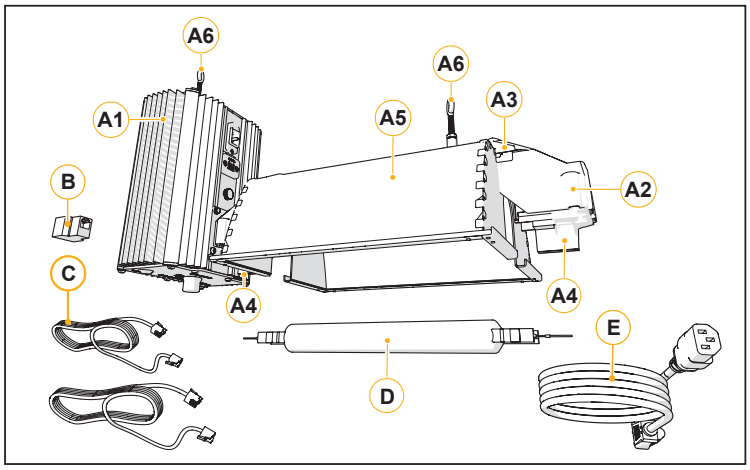

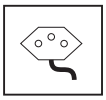
CH plug 230 V

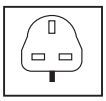
UK plug 240 V

EU plug 230 V

1.

6. Controls, connections and indications (2)

A. Female RJ14 port for controller input
B. Power output selector knob
C. Status LED
D. IEC connector for power cord

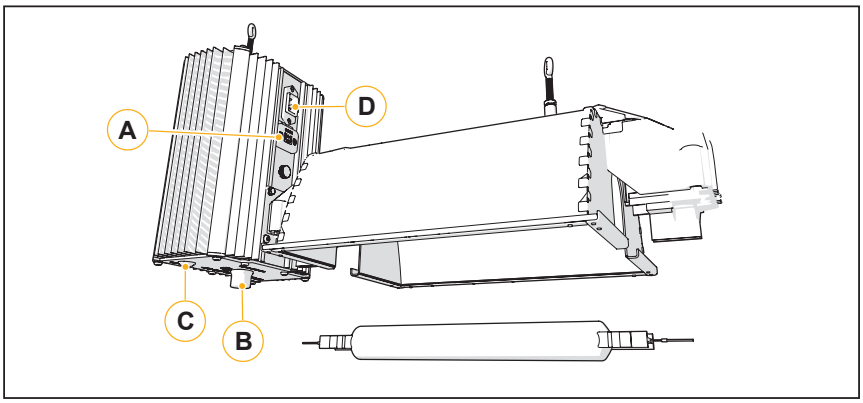

2.

7. Installing the fixture

⚠ **Warning!** Avoid coiled cords. Coiled cords may lead to electromagnetic interference.

⚠ **Warning!** Always install the lamp before connecting the fixture to the mains.

⚠ **Warning!** When connecting the fixture to the controller it may ignite. Make sure either power is disconnected or the controller is switched off.

⚠ **Warning!** Ensure the local cabling can support the voltage and current requirements of the fixture.

7.1. Preparing the fixture for use

- Switch off mains power.
- Install the lamp in the fixture (see paragraph 10.1).
- Hang the lamp by its two mounting points (3). The two mounting point are spaced 407 mm apart.

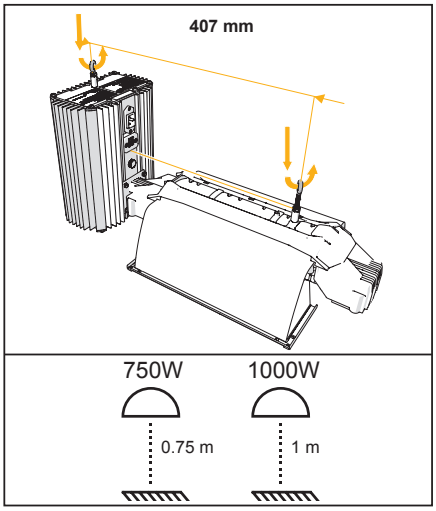

3.

7.2. Connecting the fixture to a controller (controller required)

ⓘ **Note:** A RJ14 splitter is provided with the fixture to allow for a group of up to 40 fixtures to be daisy chained to one controller port (4).

For more information on connecting fixtures to a controller, consult the controller manual.

- Switch the power selector knob on the Gavita ballast to the "EXT" (5) position.
- Connect the controller to the included RJ14 splitter (4D) using the controller's connection cable (4C).
- Connect one output of the splitter to the RJ14 plug of the fixture using the interconnect cable (4E). The indicator light on the ballast will blink when the connection is successful.
- Connect the other output of the splitter to the input of the following RJ14 splitter using an interconnect cable (4F).
- Repeat this process to connect up to 40 ballasts per controller port (4A/B).

⚠ **Warning!** Ensure the power cord and the controller cable do not touch the reflector.

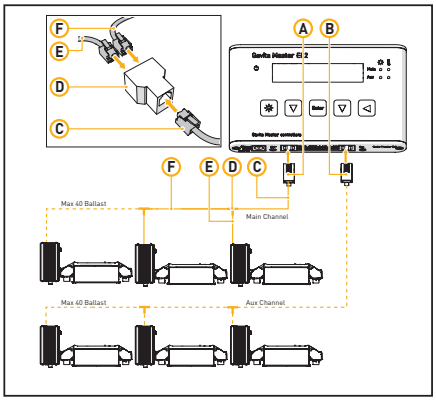

4.

7.3. Connecting the fixture to the mains

⚠ **Warning!** Ensure the cord is not coiled and does not touch any hot surfaces.

⚠ **Warning!** If external switching gear is used to switch the fixture, ensure it can cope with the inrush current of the fixture (see paragraph 3.2). Always use a double throw contactor suitable of switching a capacitive load. Never use household timers to switch the fixture!

- If a controller is used, ensure the controller is connected to the fixture.
- Plug the power cord into the mains.
- Switch on mains power.

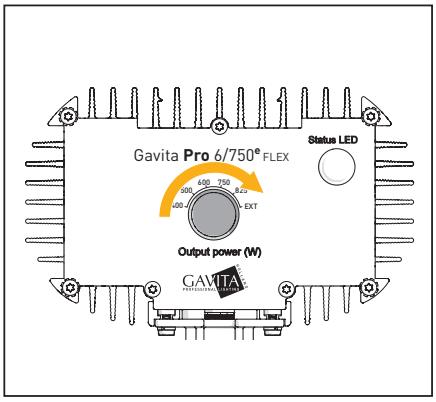

5.

8. Product use

⚠ **Warning!** Never use the fixture without a lamp or reflector!

⚠ **Caution!** Before you dim or boost your HPS lamp, make sure that you run it at nominal value (100%) for at least 100 hours to stabilize the lamp. Failing to do so may lead to sub-optimal light levels and premature end of life failure of your lamp.

8.1. Adjusting the output of the lamp manually

ⓘ **Note:** Adjustment occurs gradually (60 seconds per step) to increase the lifespan of the lamp.

- Turn the output control knob to adjust the output of the lamp:
  - Pro 750e DE: 400/500/600/750/825 Watt /EXT (6);
  - Pro 1000e DE: 600/750/825/1000/1150 Watt /EXT.

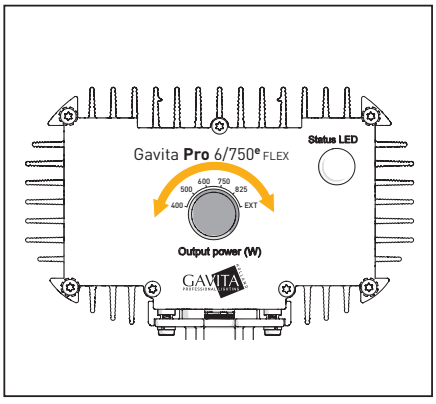

6.

8.2. Using the controller to adjust the output of the lamp

The lamp is steplessly variable when connected to a controller.

- Pro 750e DE: 50 - 110%;
- Pro 1000e DE: 50 - 115%.

Consult the manual of the controller for more information on controlling the output of the lamp.

9. Troubleshoot using the status LED

The multi colour status LED provides information on the condition of the controller and the lamp. Consult table 1 and 2 to interpret the status LED. LED signals are represented by colored dots.

- All operating modes include GREEN;
- All warning codes include RED;
- All history codes (except the ignition code) include ORANGE;
- WARNINGS and history codes overrule operating mode display.

9.1. Status indications

Status LED message	Status fixture	Description	Action/Solution
	No power / off	The fixture is not connected to the mains or the power is off	Check power
	Ballast stand-by (on EXT)	Fixture is connected to the mains and to a controller. Output of ballast is off	
	Ballast on (on EXT)	Fixture is connected to the mains and to a controller. Output of ballast is on	
	Ballast on (Manual dim)	Fixture is connected to the mains and set to manual output	
	Fixture is igniting the lamp	Fixture is trying to restart the lamp	No action required. When lamp doesn't start: Lamp too hot, defect or not properly connected (remote). Disconnect, check power cord and connections

Table 1

9.2. Error or warning indications

Status LED message	Status fixture	Description	Action/Solution
	Too low voltage	Input voltage is too low	Check mains voltage
	Too low voltage occured in past		See above, reset
	Too high voltage	Input voltage is too high	Check input voltage, check wiring and connection, check neutral in 3 phase systems
	Too high voltage occured in past		See above, reset
	Too high temperature	Electronics temperature is too high (max. 115 °Celsius)	Disconnect from mains. Check installation, clean ballast, check environment temperature (max 35 °Celsius). Make sure fixture is not heated by HPS lamp light. Wait untill the lamp is cooled down, then reconnect to mains
	Too high temperature occured in past		See above, reset
	No signal from controller (on EXT)	Fixture is connected to the mains and set to EXT but there is no signal on the control input.	If a controller is connected, search for loose connections, defect contacts or short-circuits.

Table 2

10. Inspection, maintenance and repair

⚠ **Warning!** Disconnect the product from mains before performing any maintenance or repairs.

⚠ **Warning!** Do not open or disassemble the fixture, it contains no servicable parts inside. Opening the fixture can be dangerous and will void the warranty.

⚠ **Warning!** Always allow for a cool down period of at least 30 minutes before touching the lamp or reflector.

⚠ **Caution!** Do not clean the fixture with detergents, abrasives or other agressive substances.

⚠ **Caution!** Do not touch the inside of the reflector during installation and do not use water, abrasives or detergents to clean it. This will damage the reflective surface.

⚠ **Caution!** Wait 20 minutes before activating the fixture after maintenance work has been conducted.

- Regularly check the fixture for dust or dirt buildup. Clean if necessary. Contamination may couse overheating and decreased performance.
  - Clean the inside of the reflector only with a soft, dry cloth;
  - Clean the electronic ballast and the outside of the fixture using a dry or damp cloth.
- Check the lamp monthly for discolorations or black markings. Always replace a damaged lamp.

Note: Before initial use, the lamp could have black markings. This will disappear when the lamp runs on full power. If not, replace the lamp.

- Regularly check the wiring of the product to ensure it is undamaged.

10.1. Placement and replacement of the lamp

⚠ **Caution!** Do not touch the lamp with bare hands as this will damage the lamp. Always use a fabric glove to handle the lamp.

⚠ **Caution!** Only use lamps specified by Gavita (see paragraph 3.3).

Note: The lamp must be replaced every year or after 5000 lighting hours, whichever one comes first.

- Switch off mains power.
- Hold the lamp with a fabric glove to prevent it from falling. Use a protective glove if the lamp is damaged.
- Open the lamp holders by sliding them outwards (7).
- Carefully take the lamp out of the fixture (8).
- Install the new lamp with the getter (A) near the ballast (9), with the glass vacuum seal pointed downwards (Philips lamp) or sideways (Gavita lamps).
- Use a fabric glove to carefully press the lamp in the fitting until the metal springs hold the lamp.
- Close the lamp holders by sliding them inwards (10).
- Switch on mains power.

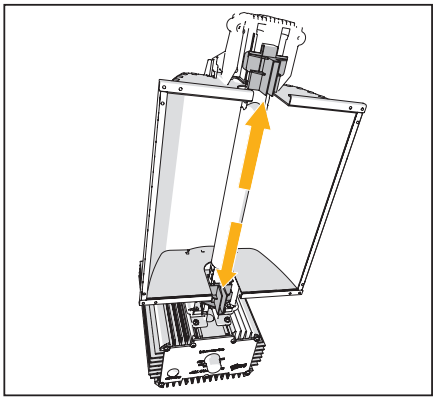

7.

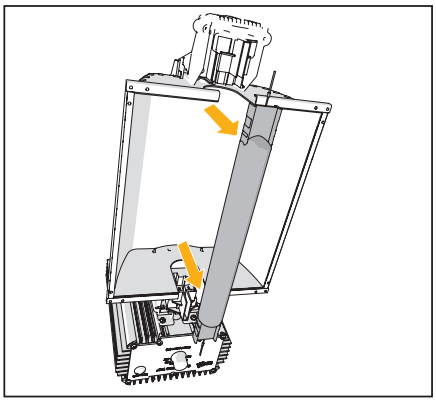

8.

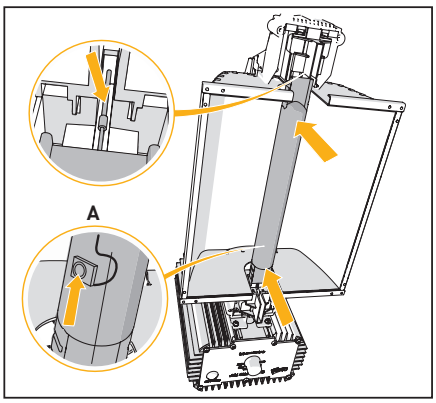

9.

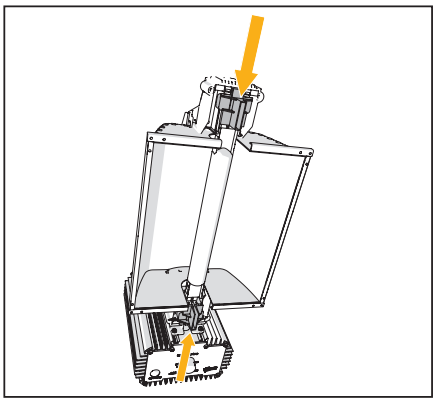

10.

10.2. Placement and replacement of the reflector

Note: Gavita recommends replacing the reflector after 5000 lighting hours. Depending on the environment and contamination levels the reflector will degrade. The vega/Miro™ aluminum can not be cleaned without damage. Therefore we recommend to change the reflector once every year. Also replace the lamp when replacing the reflector.

- Switch off mains power.
- Remove the lamp from the fixture (see paragraph 10.1).
- Support the reflector on the side of the reflector lever to prevent it from falling (11).
- Move the reflector lever up to retract the two pins holding the reflector in place (12).
- Remove the reflector (13).
- Place the new reflector. Ensure the reflector lever is in the opened position to allow the reflector to pass.
- Ensure the holes in the reflector are aligned with the pins in the fixture (14).
- Release the reflector lever so its two pins hold the reflector in place.
- Insert the lamp in the lamp holder (see paragraph 10.1).
- Switch on mains power.

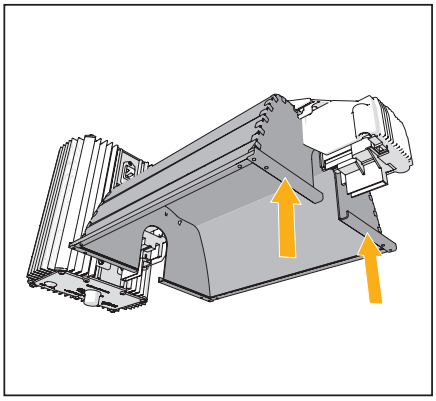

11.

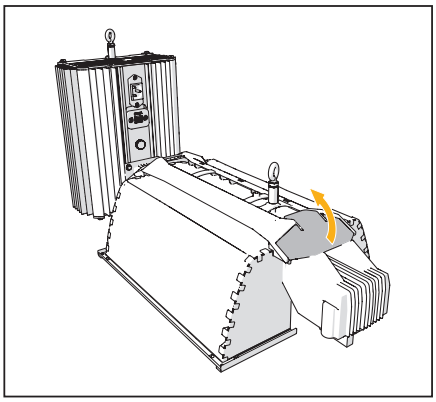

12.

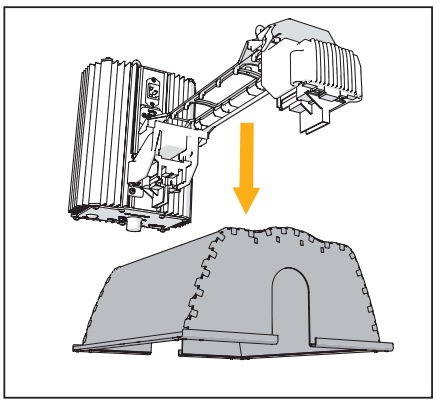

13.

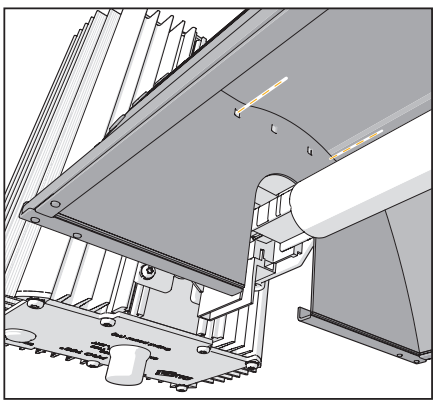

14.

11. Storage and disposal

- Store the fixture in a dry and clean environment, with an ambient temperature of -20 ~ 85 °Celsius.
- The product must not be discarded as unsorted municipal waste, but must be collected separately for the purpose of treatment, recovery and environmentally sound disposal.

⚠ **Caution!** The lamps are chemical hazardous waste and must be delivered to the designated authorities.

⚠ **Caution!** The lamp contains mercury.

12. Warranty

Gavita Holland warrants the mechanical and electronic components of their product to be free of defects in material and workmanship if used under normal operating conditions for a period of three (3) years from the original date of purchase. If the product shows any defects within this period and that defect is not due to user error or improper use Gavita Holland shall, at its discretion, either replace or repair the product using suitable new or reconditioned products or parts. For HPS lamps the warranty period is one (1) year from the original date of purchase. In case Gavita Holland decides to replace the entire product, this limited warranty shall apply to the replacement product for the remaining initial warranty period, i.e. three (3) years from the date of purchase of the original product. For service return the fixture to your shop with the original sales receipt.

Manual: Gavita Pro 750e /1000e DE EU
Changes reserved - Version 15/07

Gavita Holland bv
Oosteinderweg 127
1432 AH Aalsmeer
The Netherlands

Tel: +31(0)297-380 450
Fax: +31(0)297-380 451
E: info@gavita-holland.com
W: www.gavita-holland.com